ROHL
The Experience of Authentic Luxury™

www.rohlhome.com

3-Hole Bath Mixer with C-Spout

Rohl Country Bath Collection

A1454LP (Porcelain Levers)
A1454LC (Swarovski Crystal Levers)
A1454LM (Metal Levers)
A1454XM (Cross Handles)

FEATURES

- Fixed spout
- ¼-turn ceramic valves
- 3 x 1⅛" cutouts
- 9 ⅞" spout reach
- 5 ⅞" spout height

COLORS/FINISHES

- Polished Chrome
- Polished Nickel
- Satin Nickel
- Tuscan Brass
- Inca Brass

WARRANTY

- Limited Lifetime*

* No Warranty on Tuscan Brass Finish (TCB)

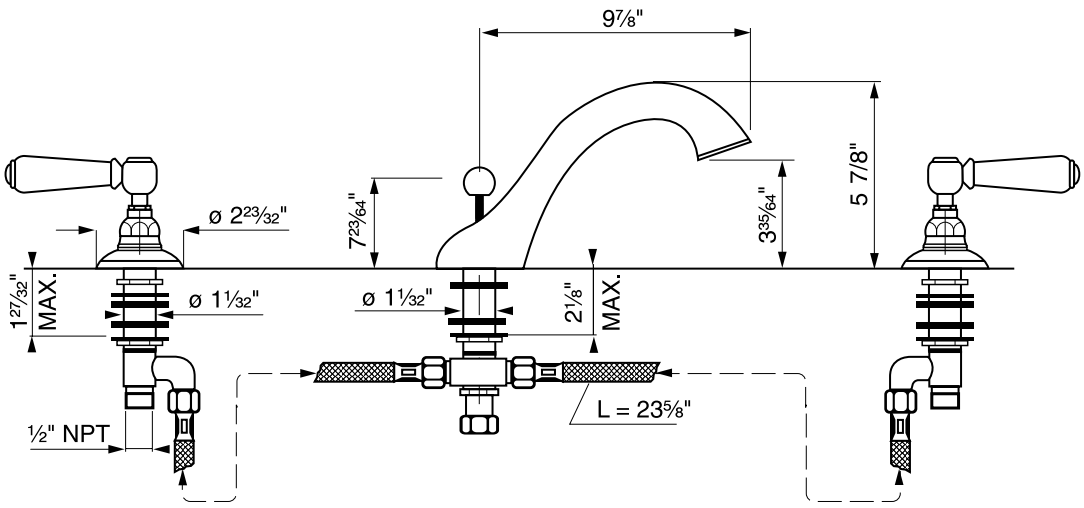

A1454LP

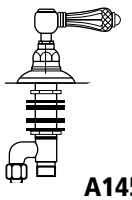

A1454LC

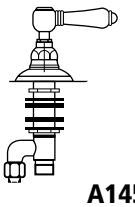

A1454LM

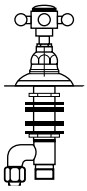

A1454XM

Consult your local Rohl showroom for additional information and specifications. For complete warranty details and a list of showrooms, go to www.rohlhome.com.

ROHL
The Experience of Authentic Luxury

www.rohlhome.com

A1454 Spare Parts

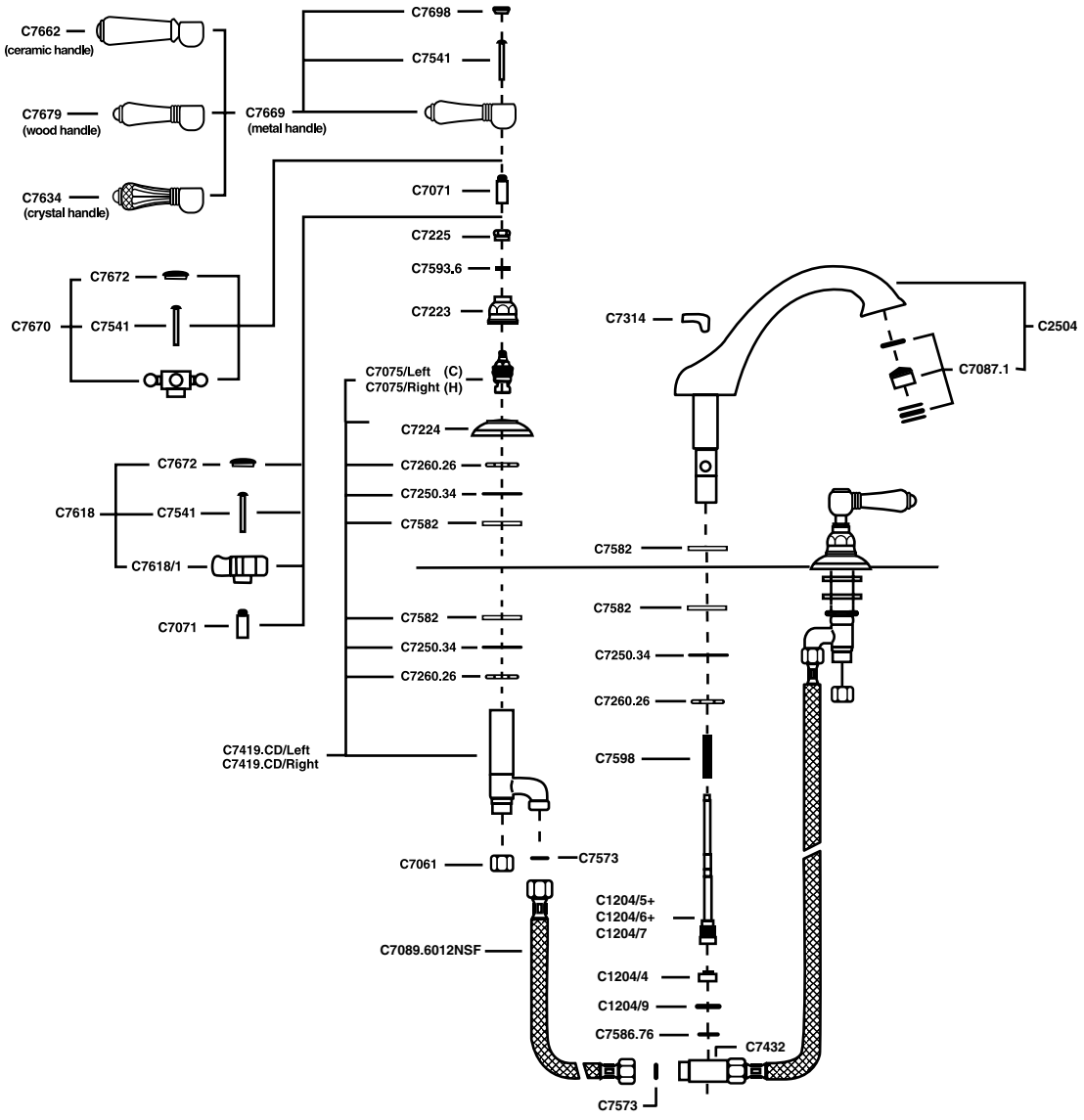

Consult your local Rohl showroom for additional information and specifications. For complete warranty details and a list of showrooms, go to www.rohlhome.com.