ROHL

Authentic Luxury for Kitchen and Bath®

www.rohlhome.com

Palladian 3-Hole Deck Mount Tub Filler

ROHL Transitional Palladian

A1984LM

FEATURES

- Palladian metal levers
- 1/4-turn ceramic valves
- Solid brass
- 3 x 1 5/16" cutouts
- 8 5/32" spout reach
- 5 43/64" spout height
- 15-17 GPM at 45 PSI
- 3/4" NPT connectors

COLORS/FINISHES

- Polished Chrome
- Polished Nickel
- Satin Nickel
- Tuscan Brass
- Inca Brass

WARRANTY

- Limited Lifetime*

*No warranty on Tuscan Brass finish

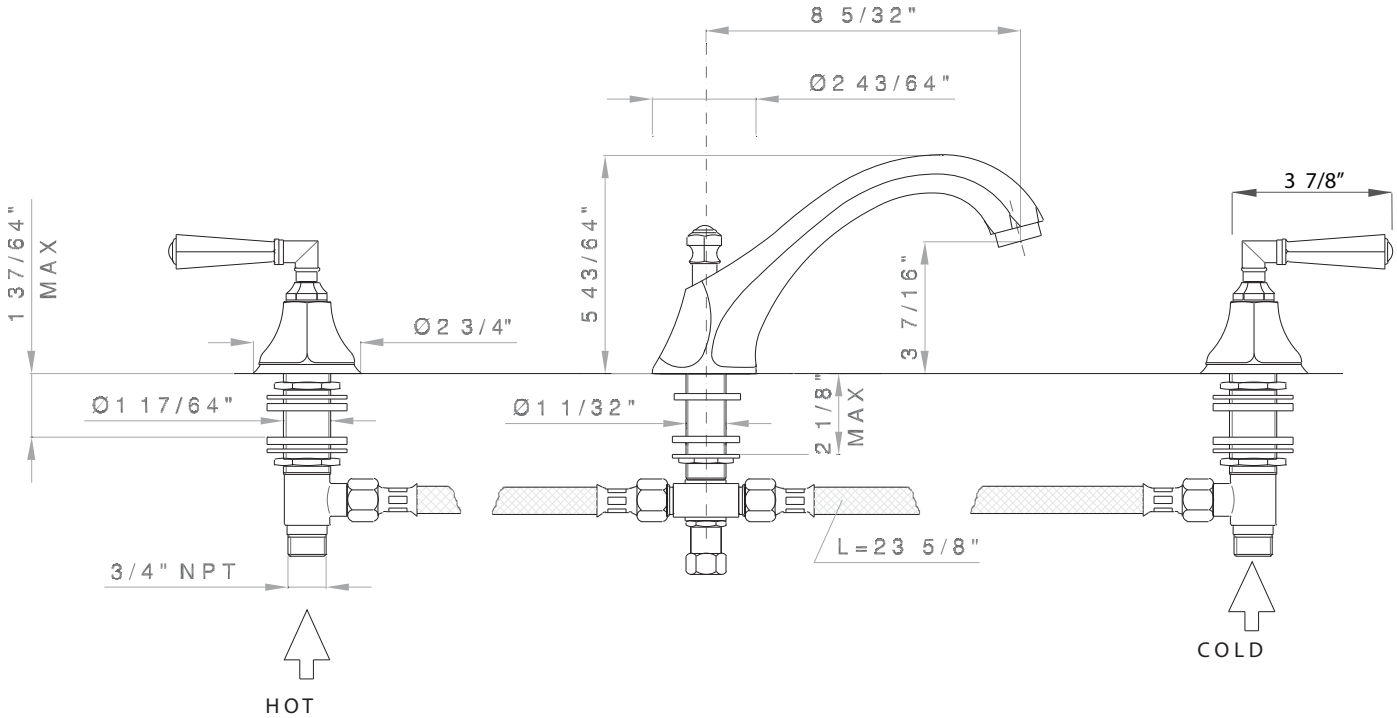

Consult your local ROHL showroom for additional information and specifications. For complete warranty details and a list of showrooms, go to www.rohlhome.com.

ROHL

Authentic Luxury for Kitchen and Bath®

www.rohlhome.com

A1984LM Spare Parts

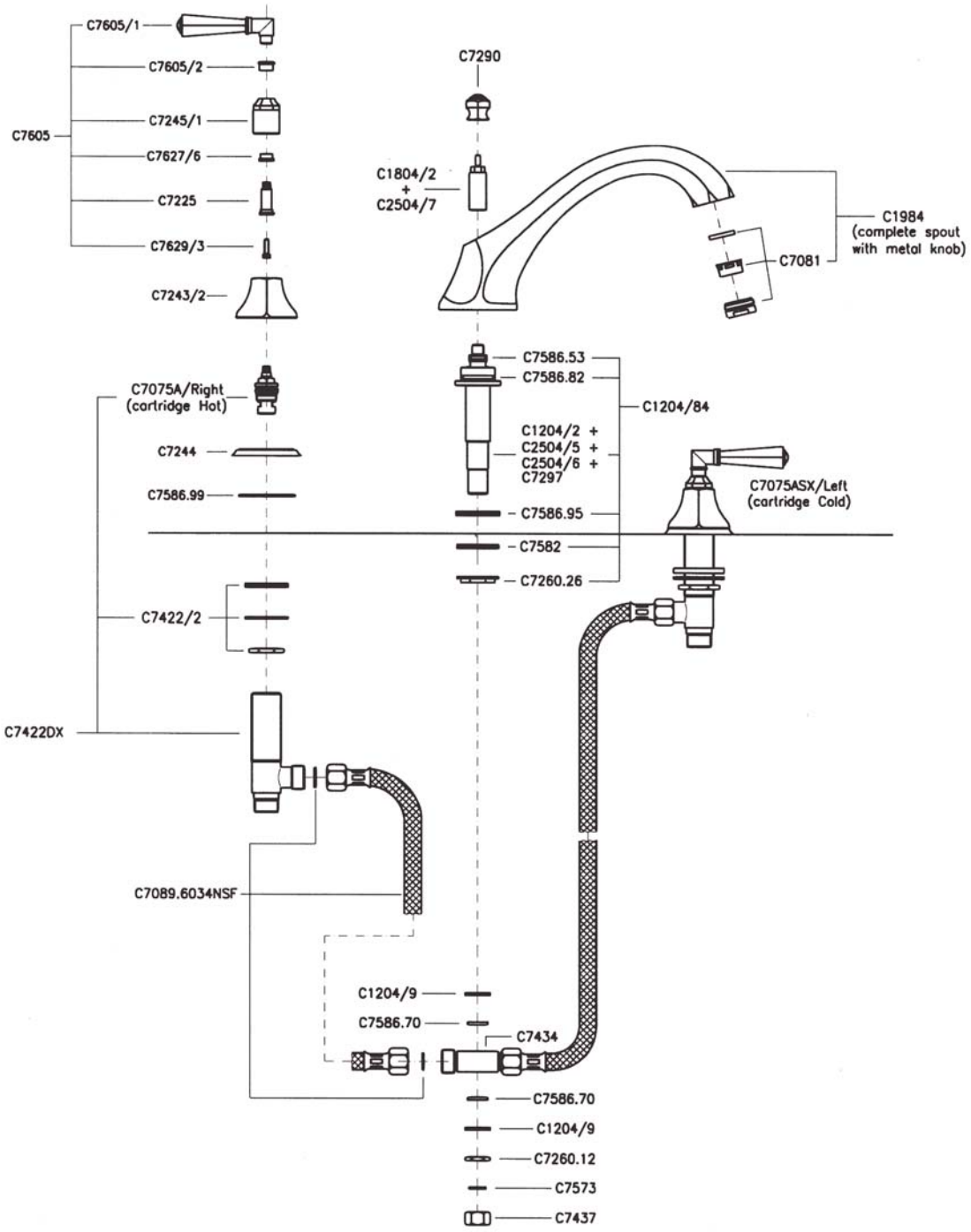

Consult your local ROHL showroom for additional information and specifications. For complete warranty details and a list of showrooms, go to www.rohlhome.com.