ROHL
Authentic Luxury for Kitchen and Bath™

www.rohlhome.com

3-Hole Bathtub Filler with Lever Handles

ROHL Perrin & Rowe Bath

U.3258L

FEATURES

- 10" spout reach
- 3 x 1 3/8" hole cutouts
- Fixed spout
- Made of Solid Brass
- Unique handle fixing clip, engineered to increase the life of the valve
- 1/4-turn ceramic disc valves
- 3/4" NPT connections
- Includes both porcelain and metal lever inserts

FINISHES

- Polished Chrome
- Polished Nickel
- Satin Nickel
- Inca Brass
- English Bronze

WARRANTY

- Limited Lifetime

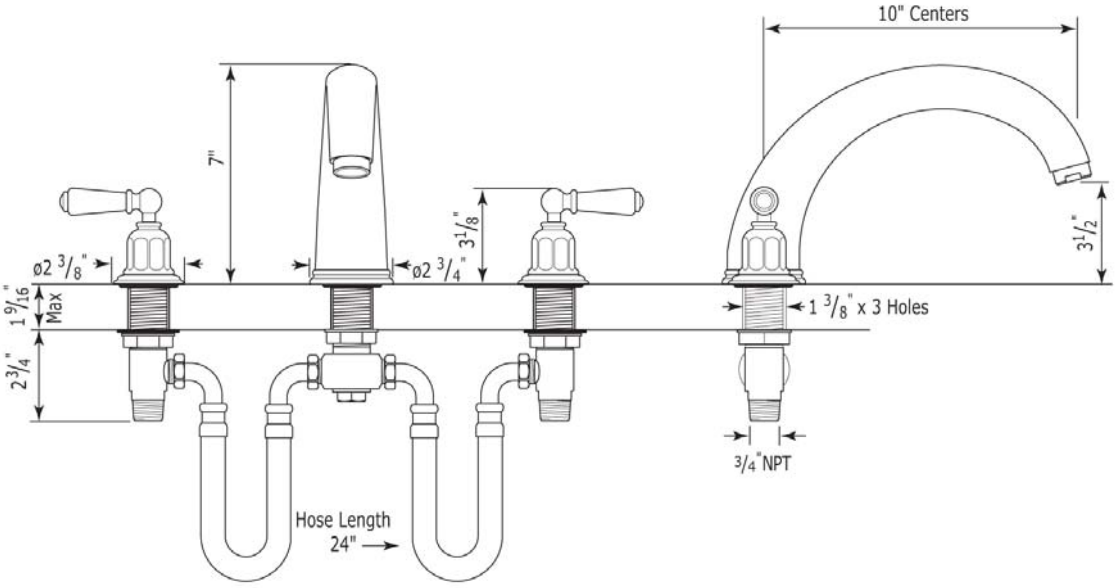

ROHL
Authentic Luxury for Kitchen and Bath™

www.rohlhome.com
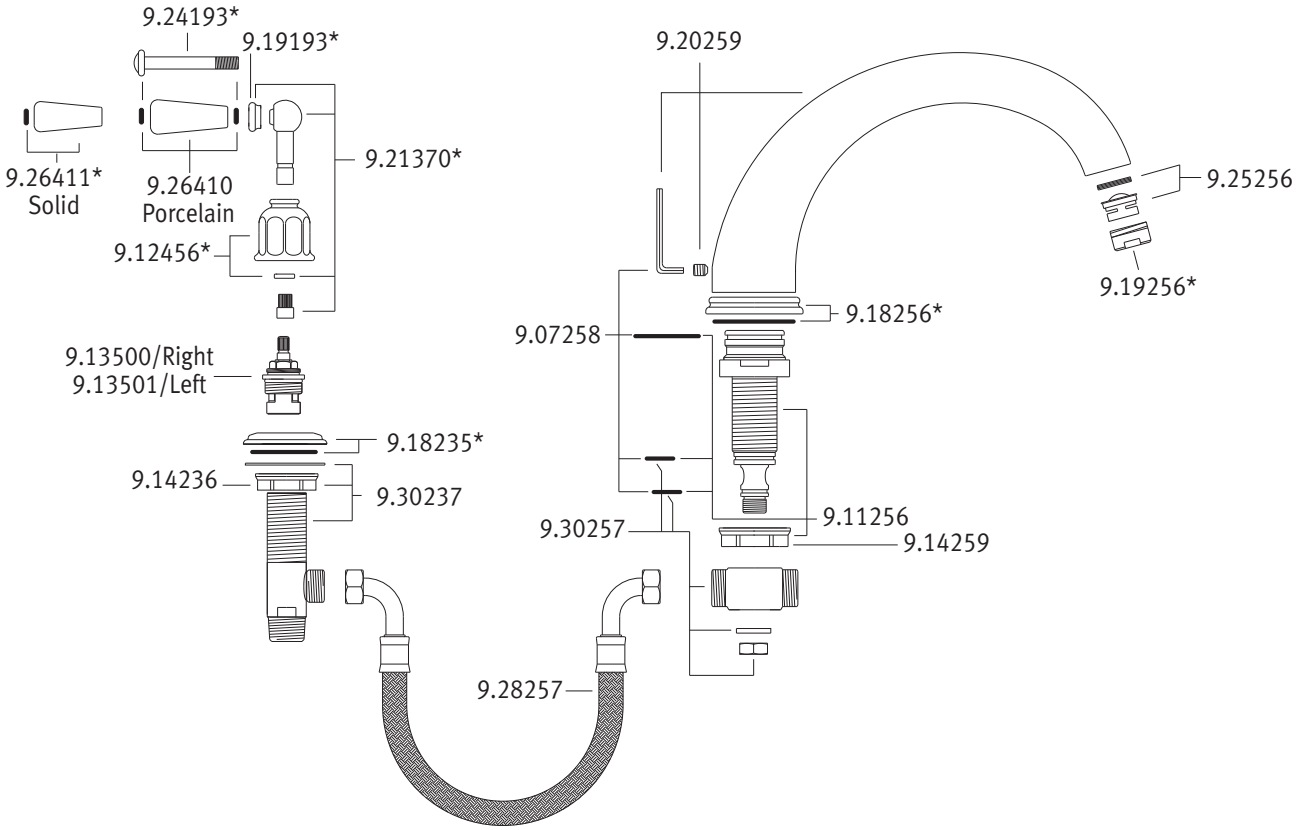
U.3258L Spare Parts