ROHL
Authentic Luxury for Kitchen and Bath™

www.rohlhome.com

Single Hole Bidet Faucet With Cross Handles

ROHL Perrin & Rowe® Bath

U.3676X

FEATURES

- Cross handles
- Fixed spout
- Spout, valve housing, handles and pop-up made from solid brass
- 1 x 1 3/8" hole cutout
- 1/4-turn ceramic disc cartridges
- Pop-up drain, 1 1/4" pipe
- Unique handle fixing clip, engineered to increase the life of the valve
- 1/2" NPSM water connections, complete with flexible stainless steel hose
- 45° swivel aerator

COLORS/FINISHES

- Polished Chrome
- Polished Nickel
- Satin Nickel
- Inca Brass
- English Bronze

WARRANTY

- Limited Lifetime

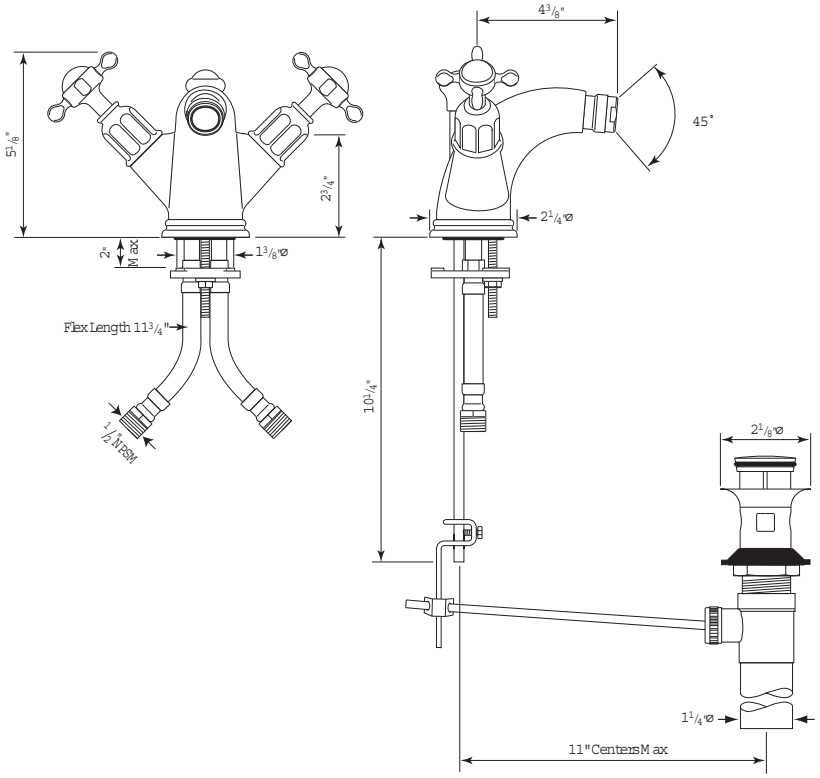

Consult your local ROHL showroom for additional information and specifications. For complete warranty details and a list of showrooms, go to www.rohlhome.com.
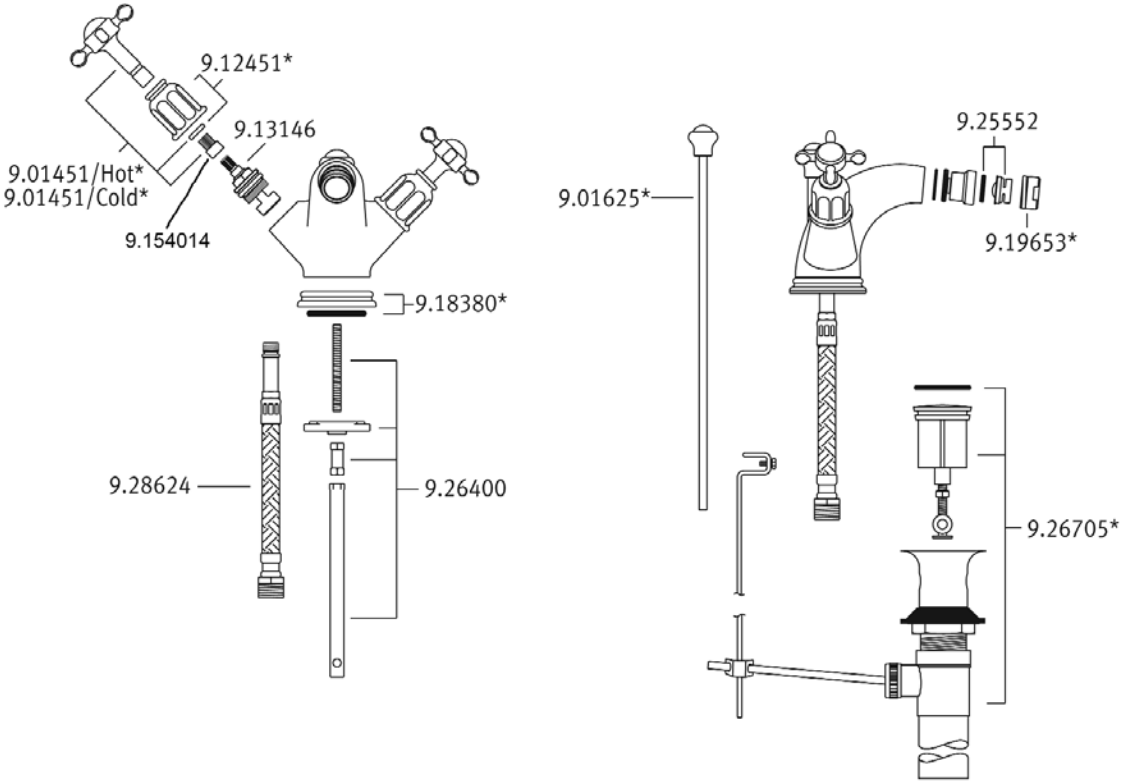
U.3676X Spare Parts