ROHL
Authentic Luxury for Kitchen and Bath™

www.rohlhome.com

## Three Hole High Neck "C" Spout Widespread Lavatory Faucet with Cross Handles

ROHL Perrin & Rowe® Bath

# U.3701X*

### FEATURES

- Cross handle design
- Fixed spout
- Spout, valve housing, and pop-up made from solid brass
- 2 x 1 1/8" hole cutouts, 1 x 1 3/8" hole cutout
- 1/4-turn ceramic disc valves
- Pop-up drain, 1 1/4" pipe
- Unique handle fixing clip, engineered to increase the life of the valve
- Innovative valve hose connection, complete with flexible stainless steel hose and 90° elbow
- 1/2" NPT connections

### COLORS/FINISHES

- Polished Chrome
- Polished Nickel
- Satin Nickel
- Inca Brass
- English Bronze

### WARRANTY

- Limited Lifetime

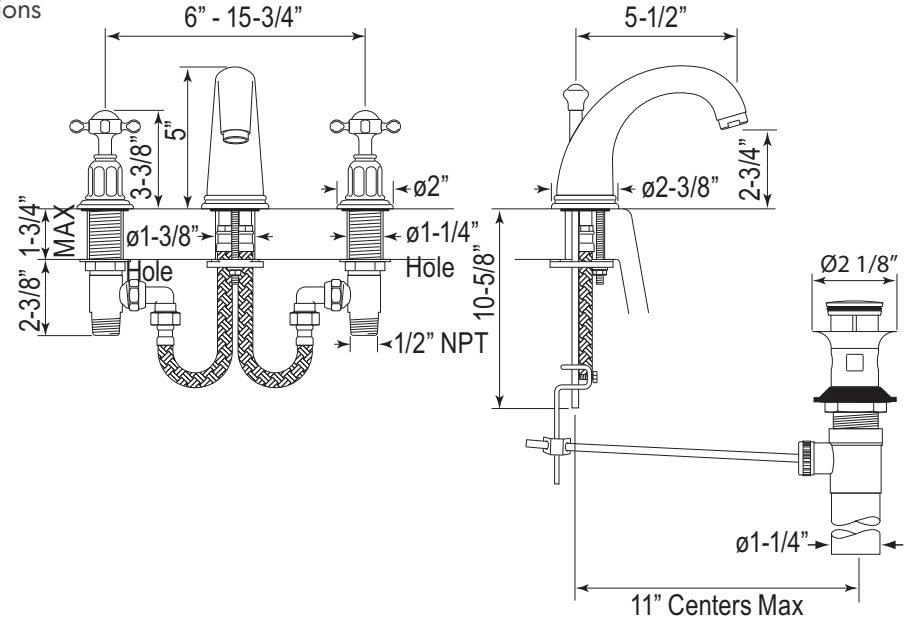


* For CA/VT, place a "-2" at end of model number for code compliant product. (Example A3608LMAPC-2)

Consult your local ROHL showroom for additional information and specifications. For complete warranty details and a list of showrooms, go to www.rohlhome.com.

ROHL
Authentic Luxury for Kitchen and Bath™

www.rohlhome.com

# U.3701X Spare Parts

Where * Indicated Specify Color.

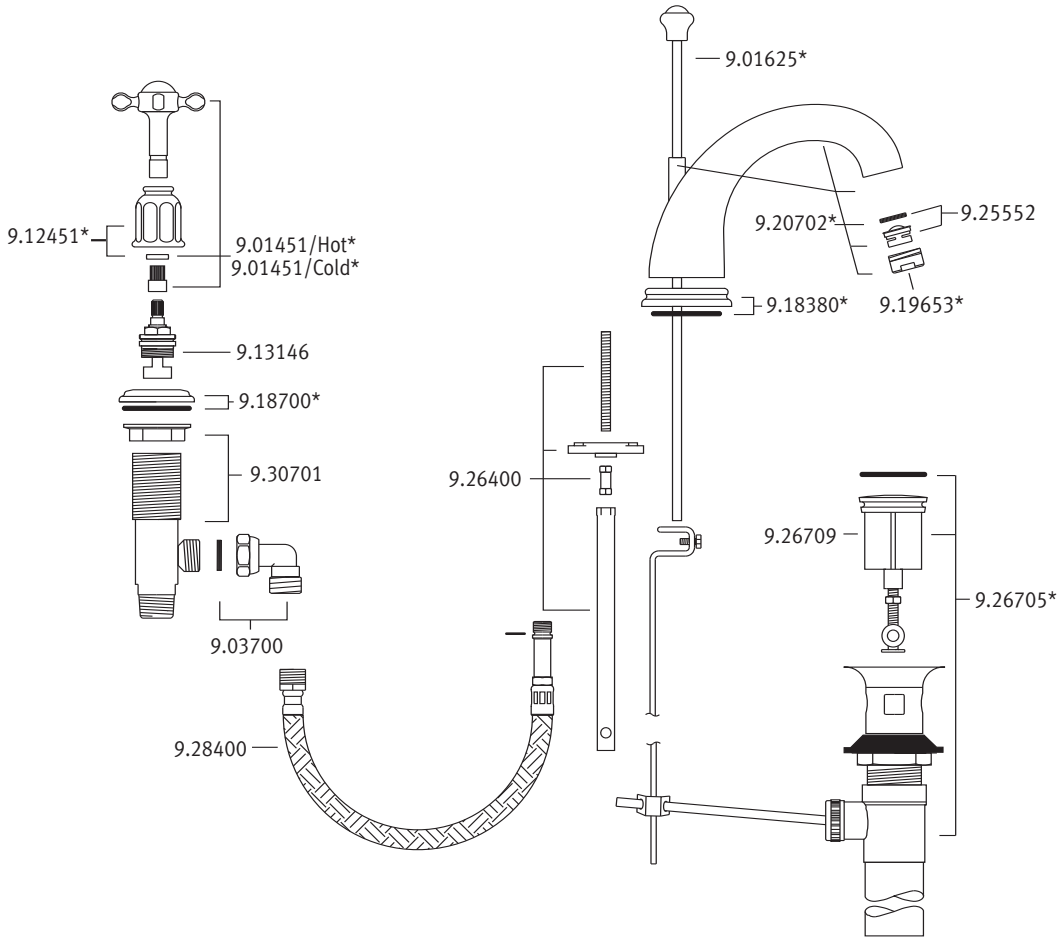


Consult your local ROHL showroom for additional information and specifications. For complete warranty details and a list of showrooms, go to www.rohlhome.com.