ROHL®
Authentic Luxury for Kitchen and Bath™

www.rohlhome.com

Georgian Era 3-Hole Column Spout Deck Bath Set with Lever Handles

ROHL Perrin & Rowe Bath

U.3757LSP

FEATURES

- 3-hole bathtub filler
- 3 x 1 3/8" hole cutouts
- Fixed spout
- Spout, valve housing, and diverter knob made from solid brass
- Porcelain cap lever handle design
- Innovative valve hose connection, complete with flexible stainless steel hose and 90° elbow
- 3/4" NPT connections, 3/4" valves
- Spout has 2 part rough and trim
- 16-20 GPM
- 1/4-turn ceramic disc valves

COLORS/FINISHES

- Polished Chrome
- Polished Nickel
- Satin Nickel
- English Bronze
- Inca Brass

WARRANTY

- Limited Lifetime

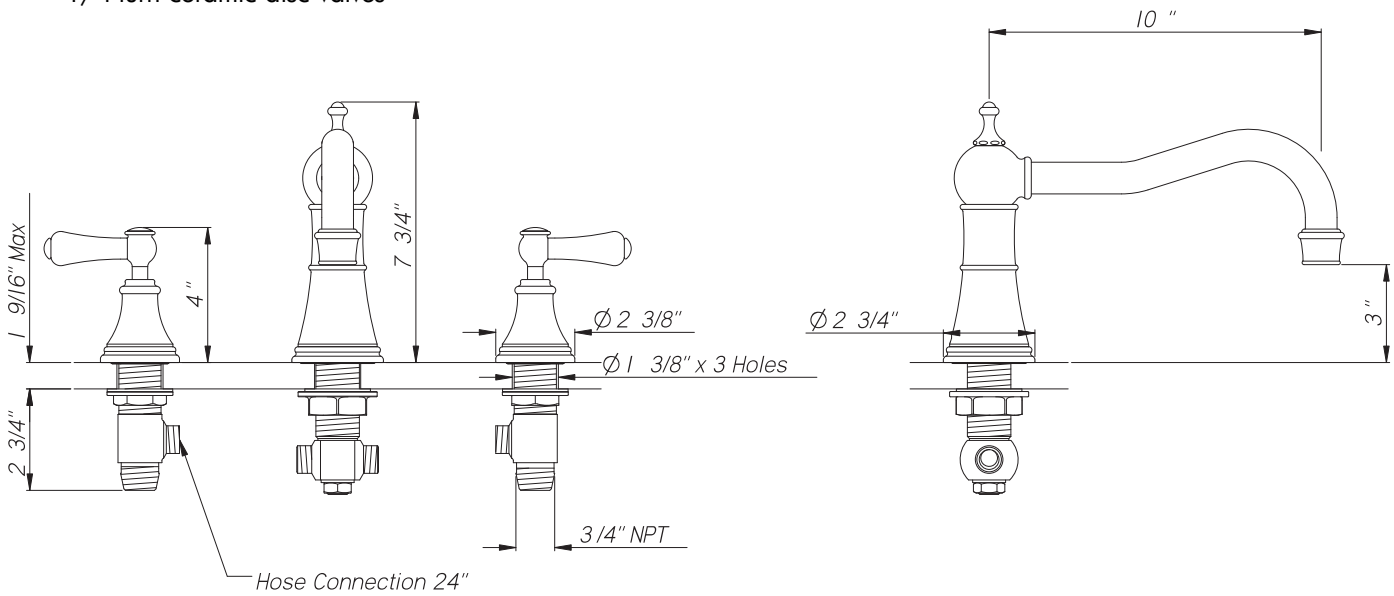

ROHL®
Authentic Luxury for Kitchen and Bath™

www.rohlhome.com
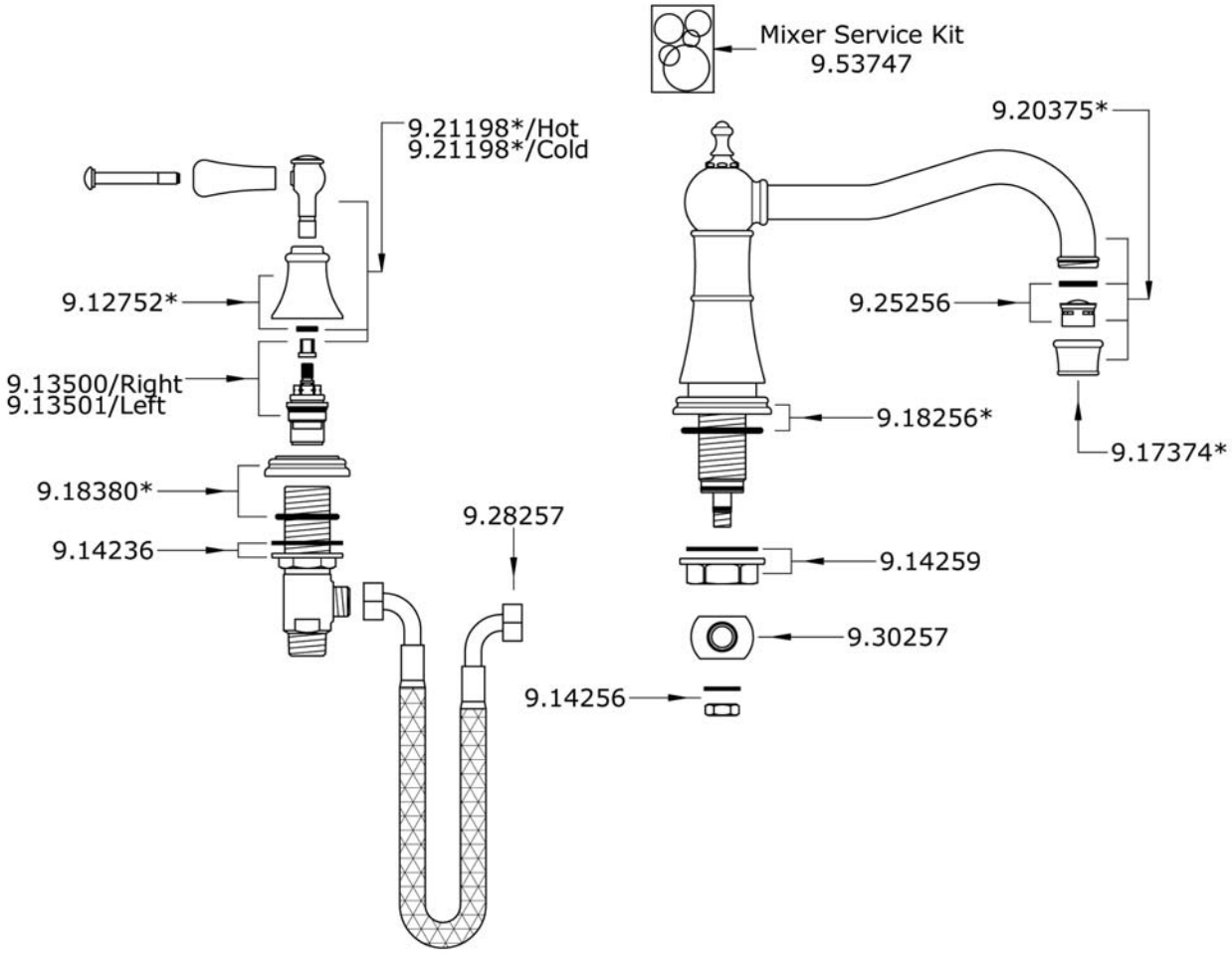
U.3757LSP Spare Parts