ROHL
Authentic Luxury for Kitchen and Bath™

www.rohlhome.com

Three Hole Bar Faucet with Cross Handles

ROHL Perrin & Rowe Kitchen

U.4768X*

FEATURES

- Cross handles
- Made from solid brass
- Ceramic 1/4 turn valves
- Swivel spout
- 1 1/2" max. installation on bench

COLORS/FINISHES

- Polished Chrome
- Polished Nickel
- Satin Nickel
- Inca Brass
- English Bronze

WARRANTY

- Limited Lifetime

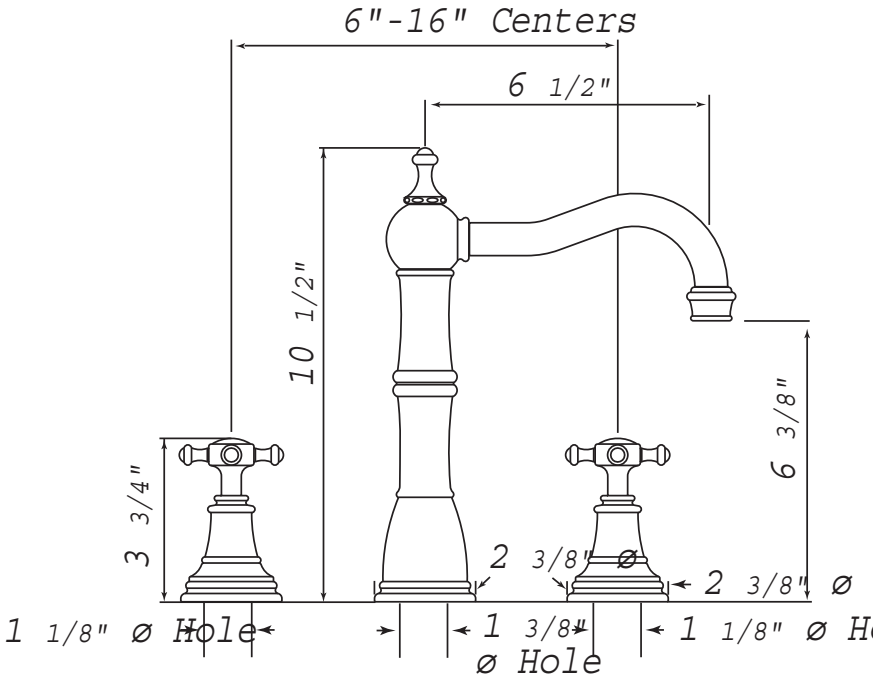

* For CA/VT, place a "-2" at end of model number for code compliant product. (Example A3608LMAPC-2)

Consult your local ROHL showroom for additional information and specifications. For complete warranty details and a list of showrooms, go to www.rohlhome.com.

ROHL
Authentic Luxury for Kitchen and Bath™

www.rohlhome.com

U.4768X Spare Parts

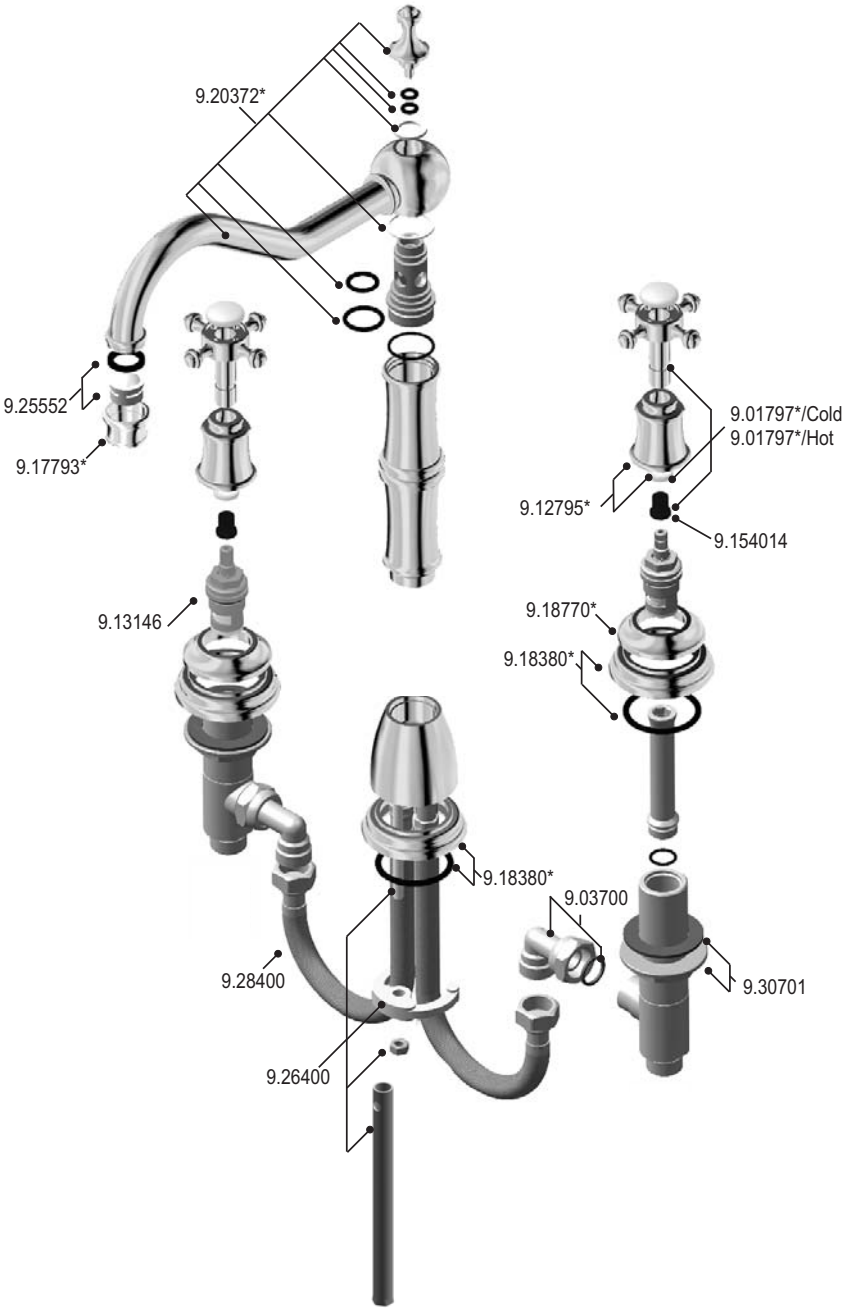

Consult your local ROHL showroom for additional information and specifications. For complete warranty details and a list of showrooms, go to www.rohlhome.com.